mm [inch]

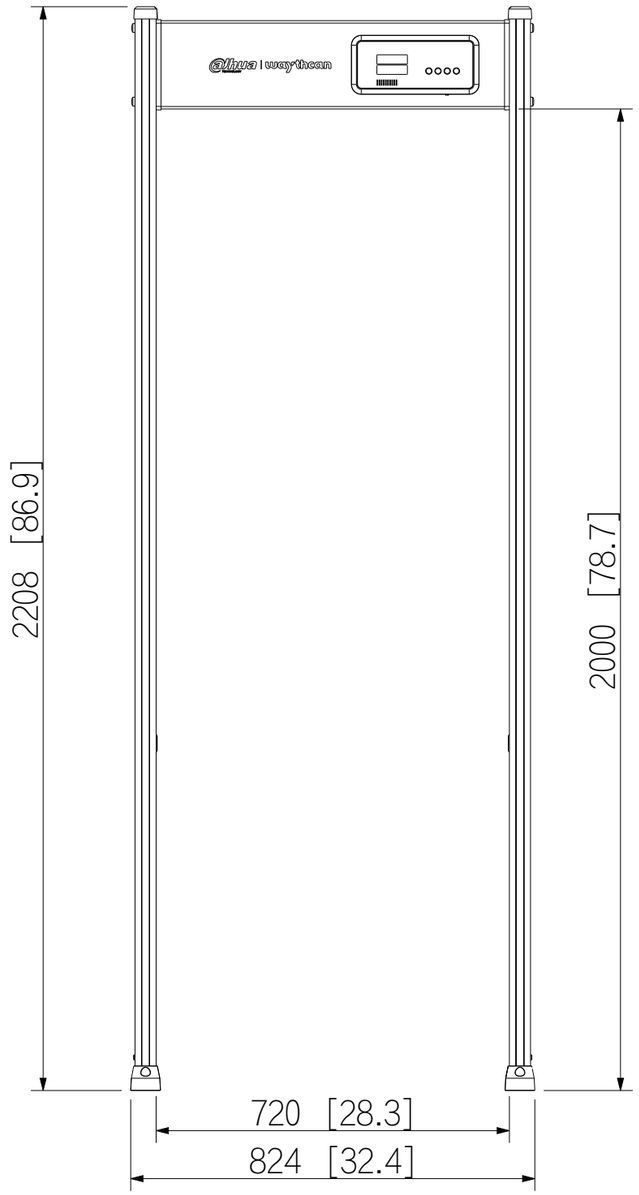
2208 [86.9]
2000 [78.7]
720 [28.3]
824 [32.4]

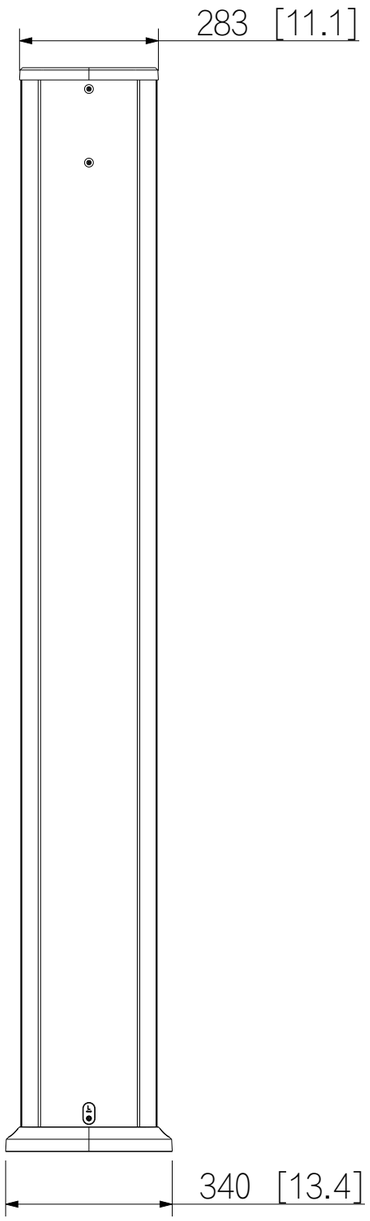
283 [11.1]
340 [13.4]

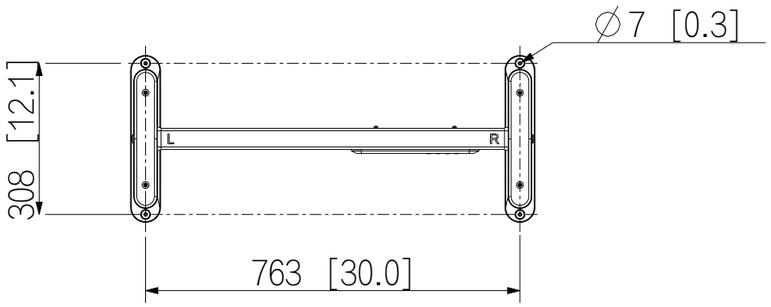
∅7 [0.3]
308 [12.1]
763 [30.0]
L
R