mm [inch]

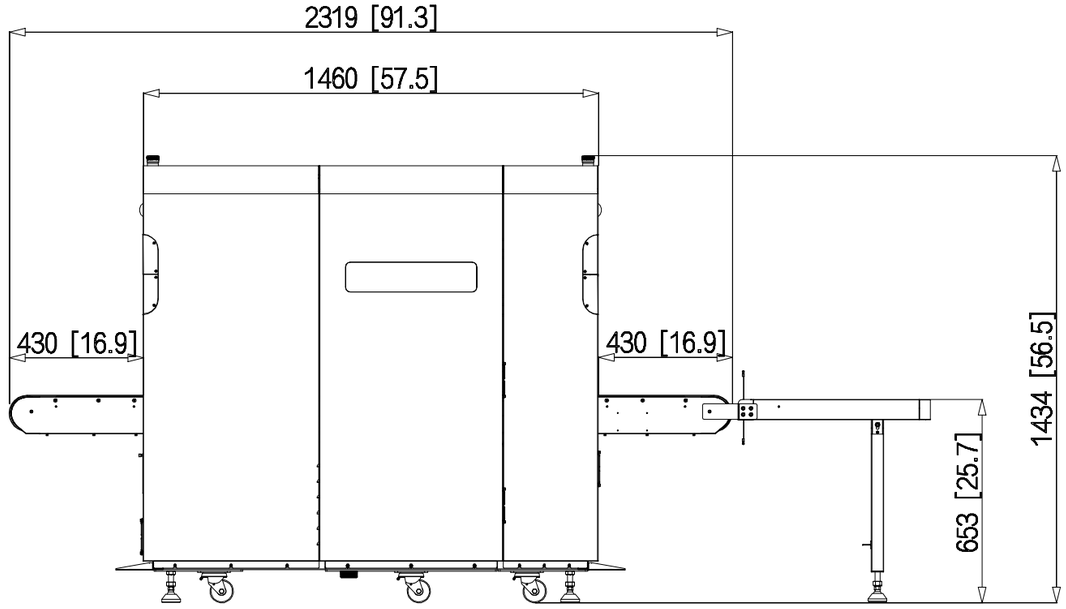
2319 [91.3]
1460 [57.5]
430 [16.9]
430 [16.9]
1434 [56.5]
653 [25.7]

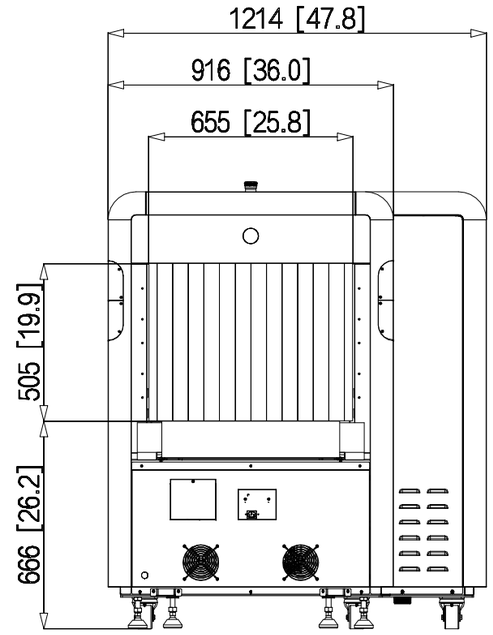
1214 [47.8]
916 [36.0]
655 [25.8]
505 [19.9]
666 [26.2]

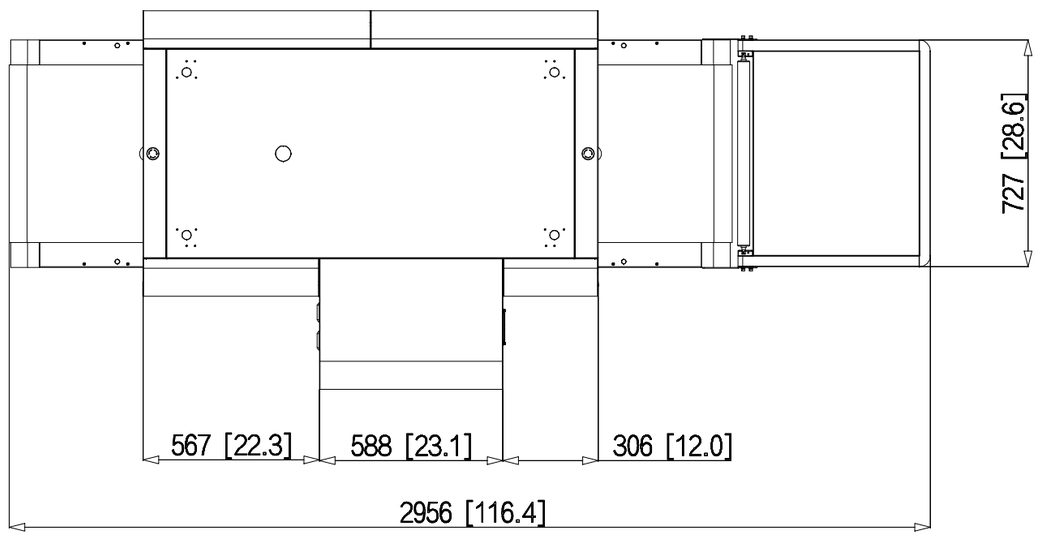
727 [28.6]
567 [22.3]
588 [23.1]
306 [12.0]
2956 [116.4]